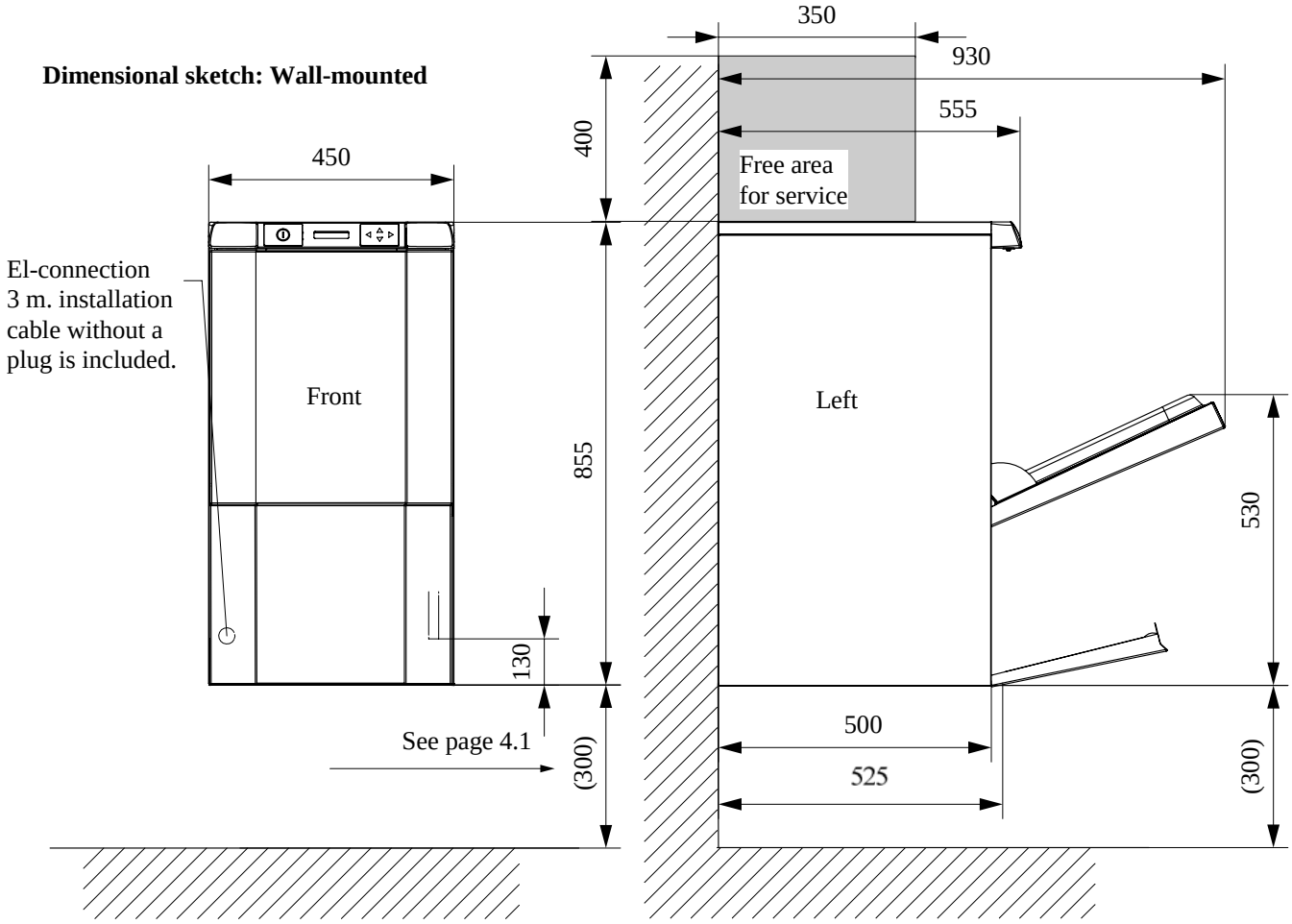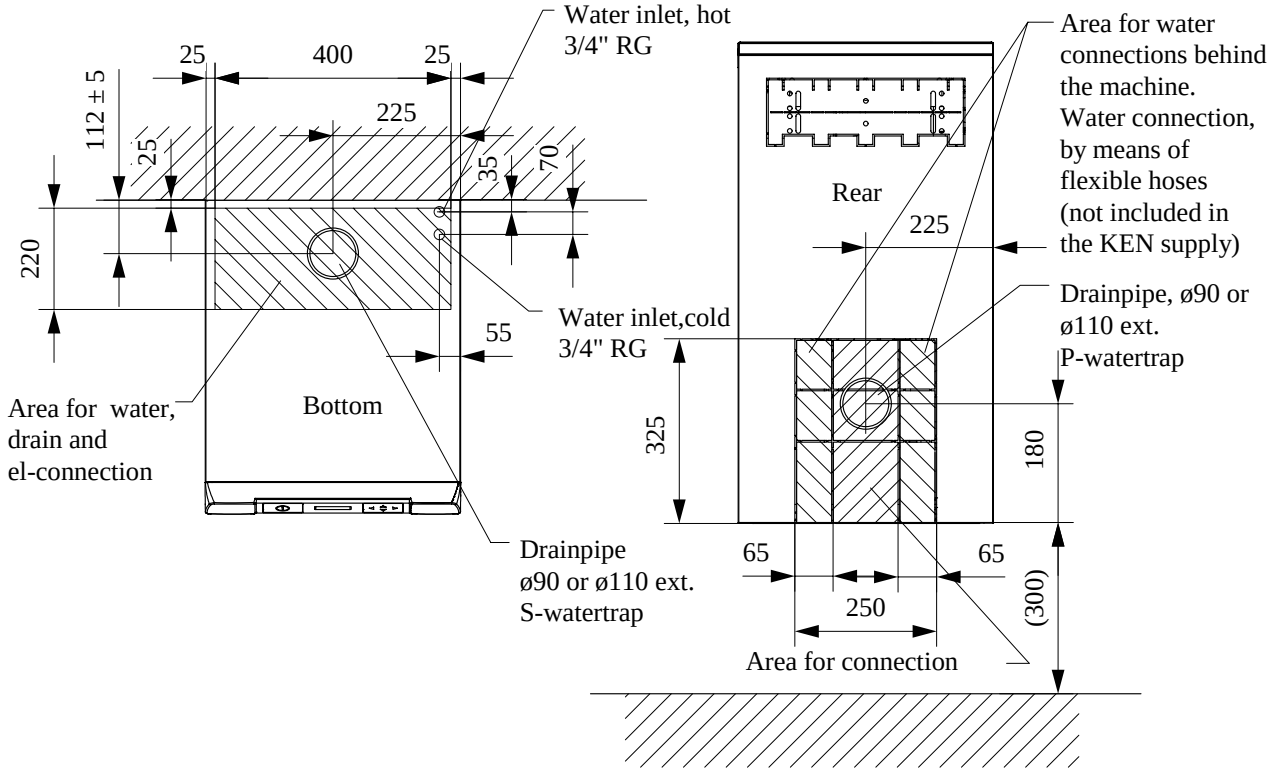Dimensional sketch: Wall-mounted